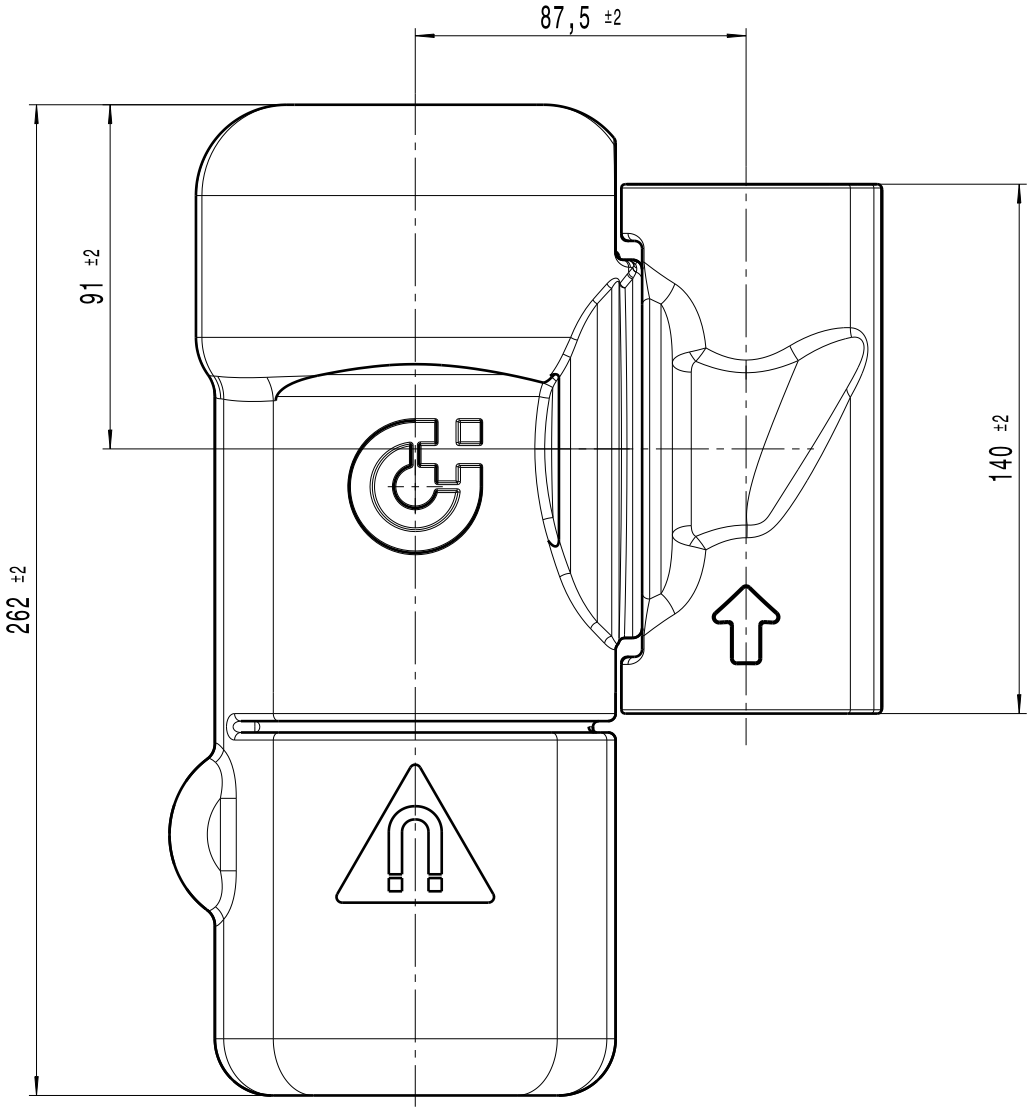

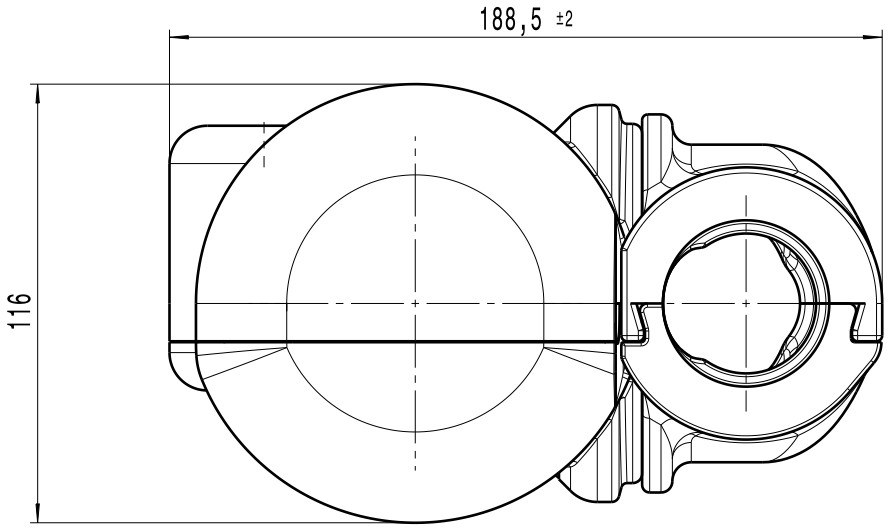

CALEFFI
Hydronic Solutions

DESCRIPTION

COIBENTAZIONE X 545302-03-05-06

CODE

CBN545305

A4